Insulated Panels
UK & Ireland

Protected by Kingspan WARRANTY

UltraTech Cleanroom Door Systems

Insulated Doors for Cleanroom Applications

POWERED BY QuadCore® TECHNOLOGY

Kingspan®

Introduction

Kingspan Cleanroom systems offer high-end, modular cleanroom solutions tailored to your individual project requirements, delivered seamlessly by technology experts.

With over 50 years' experience and exciting innovations behind us, we now bring that knowledge to the sector to offer you the ultimate cleanroom solutions.

Our team provides 360° support from specification, technical advice, 3D representation, manufacture, installation and project handover.

Kingspan Benefits

Environmental

Kingspan Insulated Panels produced in the UK are certified to BES 600 (Framework Standard for the Responsible Sourcing of Construction Products) 'Good'.

Kingspan Insulated Panels manufacturing facilities located in Kingscourt, Holywell and Sherburn generate renewable energy onsite which contributes to that sites energy mix.

Quality & Durability

QuadCore® UltraTech Precision Panels are manufactured from manufactured from high quality materials using state-of-the-art production equipment to rigorous quality control standards, complying with BS EN ISO 9001 standard, ensuring long-term reliability and service life. The panels are also manufactured under Environmental Management System Certification BS EN ISO 14001, Energy Management System Certification BS EN ISO 50001 and Occupational Health and Safety Certification BS EN ISO 45001.

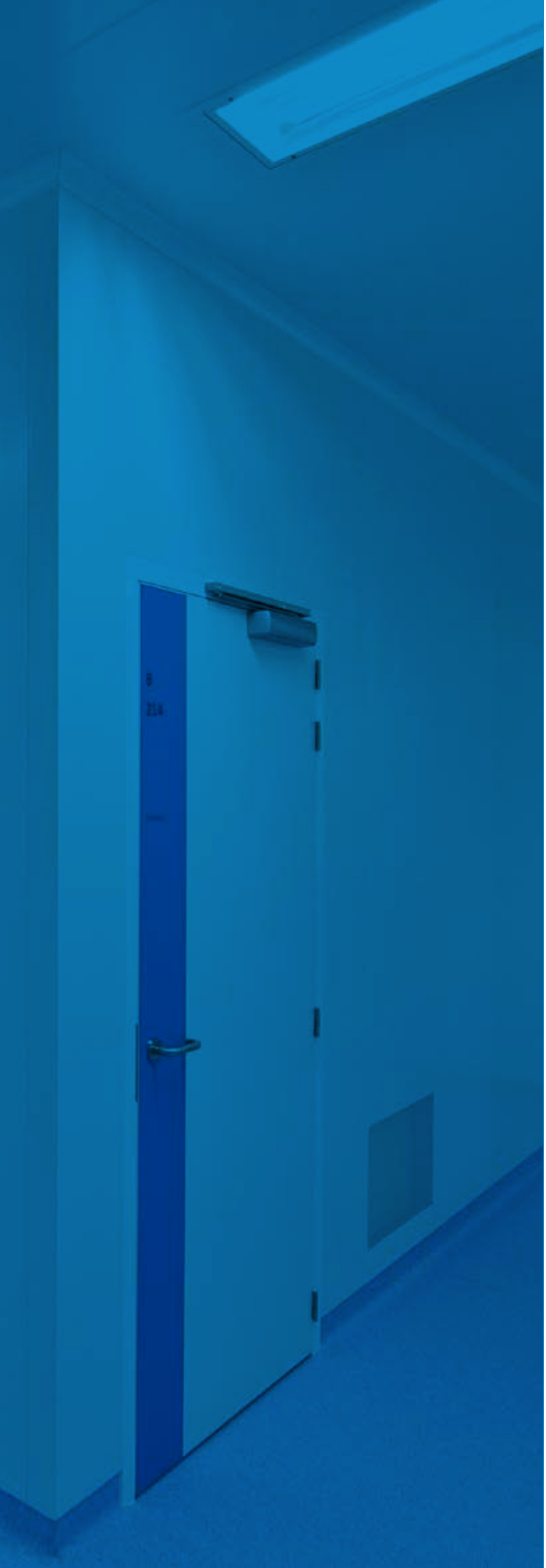

Contents

UltraTech Insulated Cleanroom Door Systems **4**

UltraTech Versatile Door Range

UTSF40 8

UTSF60 10

UTSF80 12

UltraTech Precision Door Range

UTF60 14

UTFM60 16

UTF80 18

UltraTech Sliding Door UT SL 20

Case Studies **22**

UltraTech Cleanroom Door Systems

The UltraTech range of Cleanroom Door Systems has been specially designed based on feedback from industry experts with key focus on optimising clean-ability, performance and functionality.

Standard details include enclosed drop seals, flush vision panels and stainless steel flush ironmongery.

Along with cleanable details the UltraTech Cleanroom Door Systems range has been made with product quality, ease of installation and durability in mind.

Coatings and Finishes

A range of finishes is available to compliment a variety of internal clean controlled environments. Depending on the door type, cleaning regime and internal environment there is a variety of options to choose from such as powder coating and the Kingspan CLEAN*safe* range of coated steel finishes.

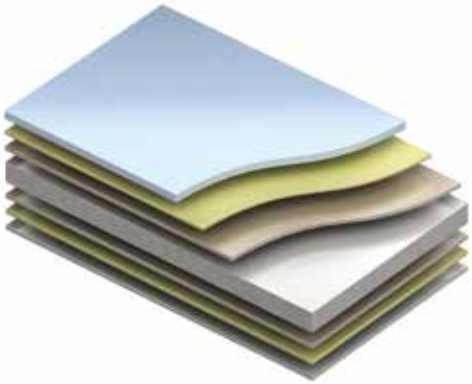

CLEAN*safe*

UltraTech Cleanroom Door Systems
Features

Innovative design based on feedback from industry experts with key focus on optimising clean-ability, performance and functionality.

Powder coated to precisely match the door leaf, panels and accessories.

Fully flush window using state-of-the-art folding equipment to ensure clean and smooth integration.

Easy to clean smooth, sealed construction does not harbour dirt or bacteria, for the highest GMP applications.

Integrated push buttons in the frame with maglock at the head.

Various stainless steel handles and lock cases available.

Fully enclosed, recessed threshold drop seal and perimeter gaskets to ensure best in class air leakage performance.

UltraTech Cleanroom Door Systems

The UltraTech Door Range includes both fully flush and semi-flush options ideal for a range of clean controlled environments. Specifically designed for use in cleanroom facilities validated to ISO and Cleanroom GMP grades.

Featuring high-performance QuadCore® insulation technology, UltraTech Cleanroom Doors deliver a high level of environmental and thermal performance in addition to their high air permeability performance. This door range is designed to be as installation-friendly and cleanable as possible.

Mineral Fibre core also available on request.

Air Permeability Performance*

- Air permeability according to EN 12426: 2000 Class 4.
- Leakage at +50Pa positive pressure 1.9m³/h.m².
- Leakage at -50Pa positive pressure 2.98m³/h.m².
- Resistance to water penetration according to EN 12425: 2000 Class 0.
- Resistance to windload according to EN 12424: 2000 Class 1.

*Values for Single doors only, for double door values please request from Technical team).

Insulation Core

QuadCore® UltraTech Panel is manufactured with a HCFC, CFC and HFC free QuadCore® insulation core.

*Mineral fiber doors availble on request also

Site Installation Procedure

Site assembly instructions and construction details are available from Kingspan Tech-eXchange.

Technical Details

Door drawings and models are available in Revit format. Please scan the QR Code to gain access to our Revit families through BIM360.

For 2D CAD files and design requests, please contact Kingspan Tech-eXchange.

Sea Freight

Fully timber crated packs are available on projects requiring delivery by sea freight shipping, at additional costs. Alternatively, steel containers can be used. Special loading charges apply.

Delivery

All deliveries (unless indicated otherwise) are by road transport to project site. Off-loading is the responsibility of the client.

Technical Specification

Door Leaf	QuadCore® insulation core. Optional Mineral Fibre core available.
	40mm, 60mm, 80mm thickness available depending on door type
Door Coatings	Kingspan CLEAN*safe* coating range
	Powder coated galv
Door Frame	Aluminium 6063 alloy – polyester powder coated (colour matching available)
	Frame suitable for 60mm – 150mm wall thickness
Clear Opening Width	Single – 1,050mm (max.)**
	Double – 2,100mm (Max.)**
Clear Opening Height	Single – 2,400mm (max.)
	Double – 2,400mm (max.)
Standard Fitting Options	Recessed drop seal
	Stainless steel level handle with range of lock and latch options
	Stainless steel pull handles and push plates
	Stainless steel fixed hinge or adjustable hinge
Additional Fittings Available	Vision panels – two 6mm laminated glass panels with flush intergration to door leaf
	Interlocking system
	Emergency panic bar
	Stainless steel kickplates
	Door closer
Non-standard Option	Four-sided frame

*Values stated are for standard single door with drop seal. For other information please contact the Tech-eXchange team.
**For larger sizes please contact Tech-eXchange team for information.

UltraTech Versatile Single Door
UTSF40

Technical Drawings

Semi-flush door using clamp frame to suit wall thicknesses 60-150mm and a 40mm door leaf.

Door Elevation

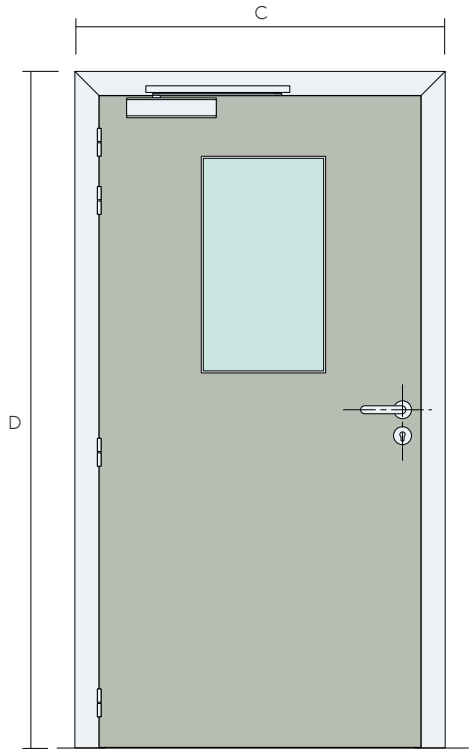

Door Head

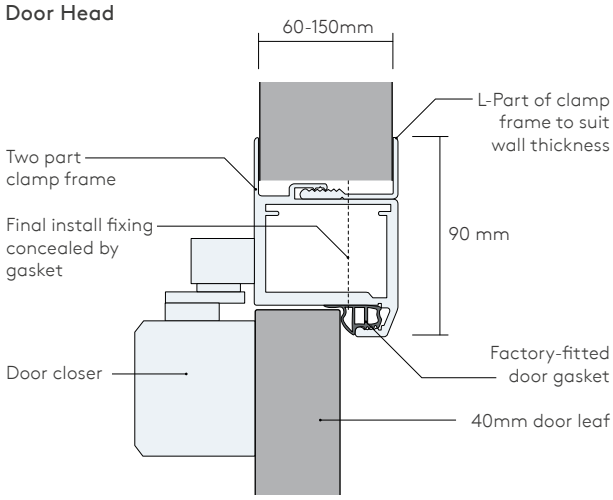

Door Jamb

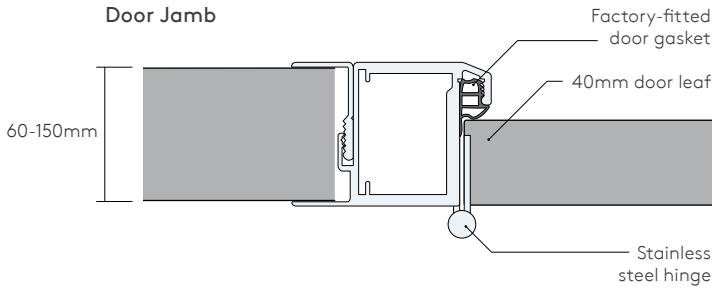

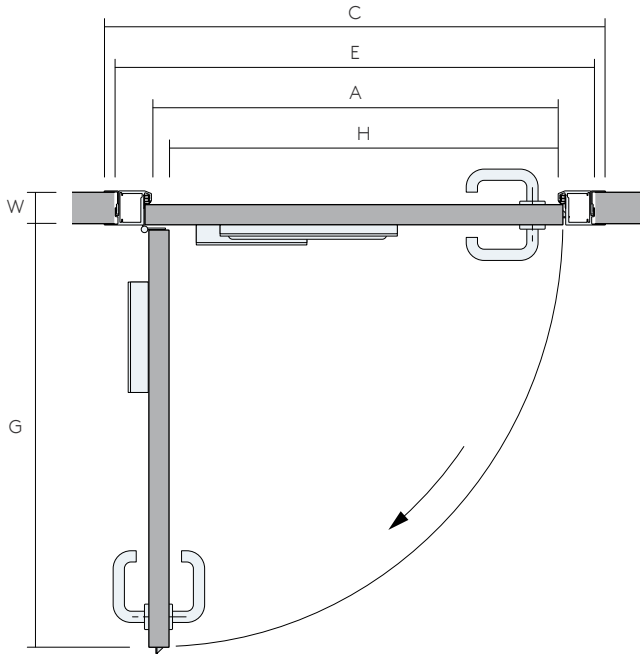

Dimensions

Clear Opening Width	A
Clear Opening Height	B
Overall Frame Width (C)	A + 180mm
Overall Frame Height (D)	B + 90mm
Structural Opening Width (E)	A + 140mm
Structural Opening Height (F)	B + 70mm
Door Clearance @ 90° (G)	A + 50mm
Clear Opening Door @90° (H)	B – 40mm
Panel Thickness (W)	60-150mm

UltraTech Versatile Double Door
UTSF40

Technical Drawings

Semi-flush door using clamp frame to suit wall thicknesses 60-150mm and a 40mm door leaf.

Door Elevation

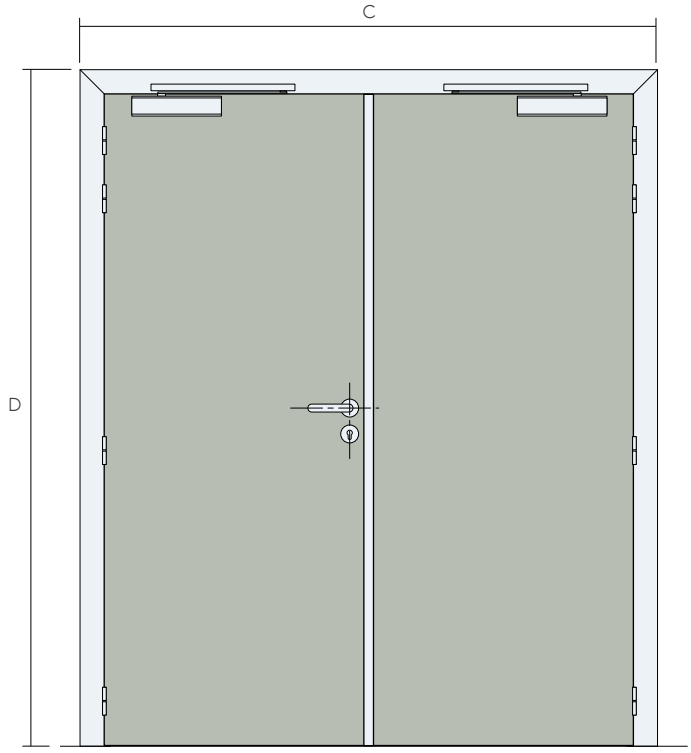

Door Head

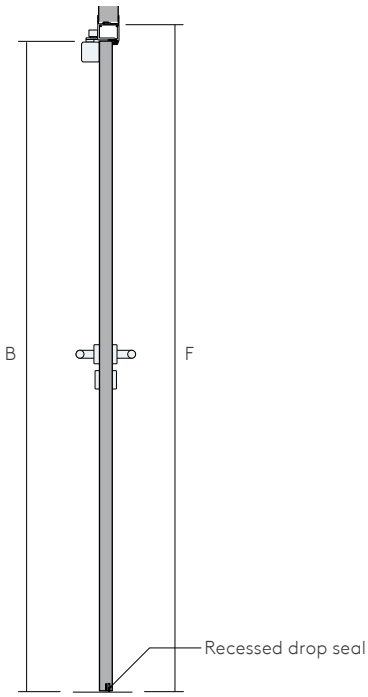

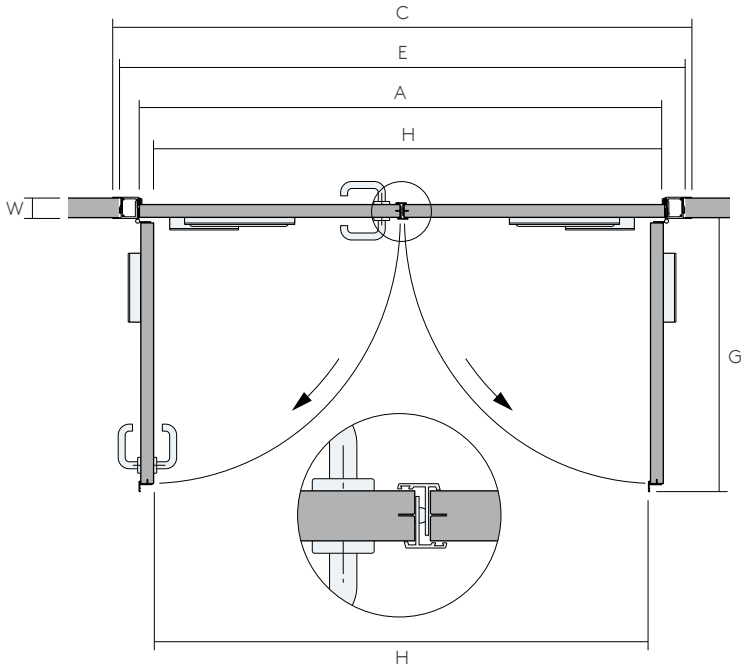

Dimensions

Clear Opening Width	A
Clear Opening Height	B
Overall Frame Width (C)	A + 180mm
Overall Frame Height (D)	B + 90mm
Structural Opening Width (E)	A + 140mm
Structural Opening Height (F)	B + 70mm
Door Clearance @ 90° (G)	A / 2 + 50mm*
Clear Opening Door @90° (H)	B – 80mm
Panel Thickness (W)	60-150mm

*Only on symmetrical doors. For door and half please contact technical for more information.

UltraTech Versatile Single Door
UTSF60

Technical Drawings

Nearly-flush door using clamp frame to suit 60mm walls and a 60mm flush door leaf.

Door Elevation

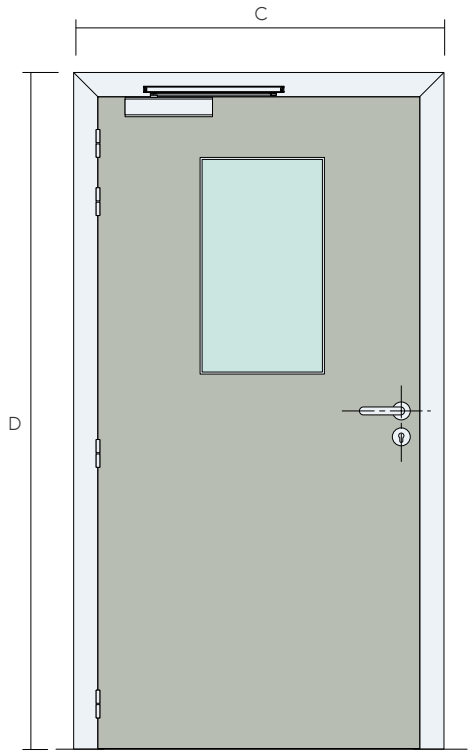

Door Head

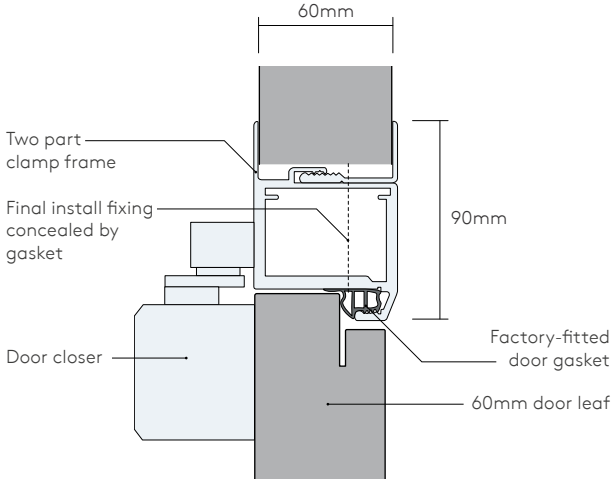

Door Jamb

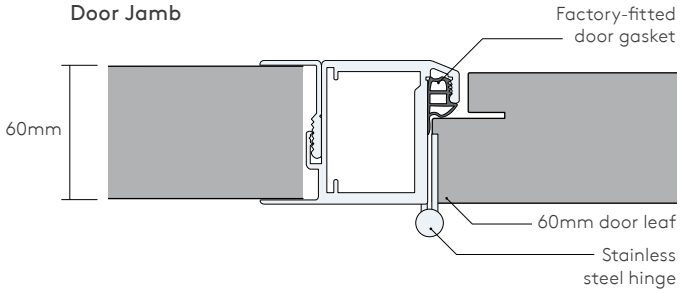

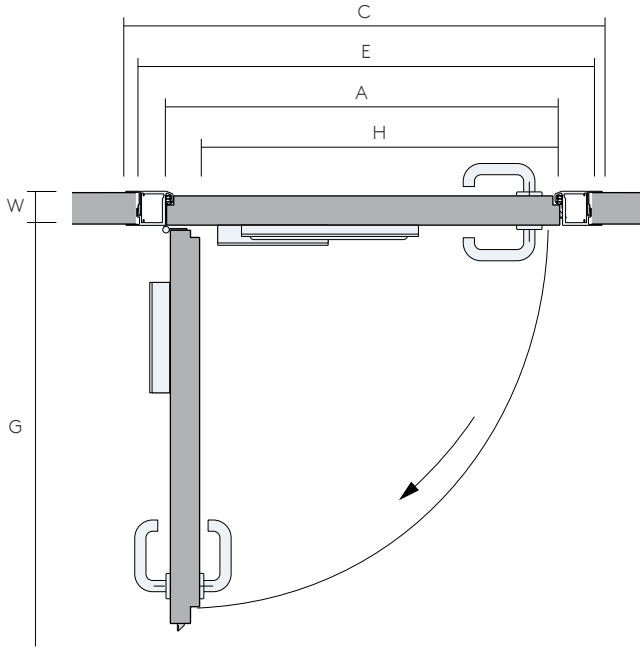

Dimensions

Clear Opening Width	A
Clear Opening Height	B
Overall Frame Width (C)	A + 180mm
Overall Frame Height (D)	B + 90mm
Structural Opening Width (E)	A + 140mm
Structural Opening Height (F)	B + 70mm
Door Clearance @ 90° (G)	A + 50mm
Clear Opening Door @90° (H)	B – 60mm
Panel Thickness (W)	60mm

UltraTech Versatile Double Door
UTSF60

Technical Drawings

Nearly-flush door using clamp frame to suit 60mm walls and a 60mm flush door leaf.

Door Elevation

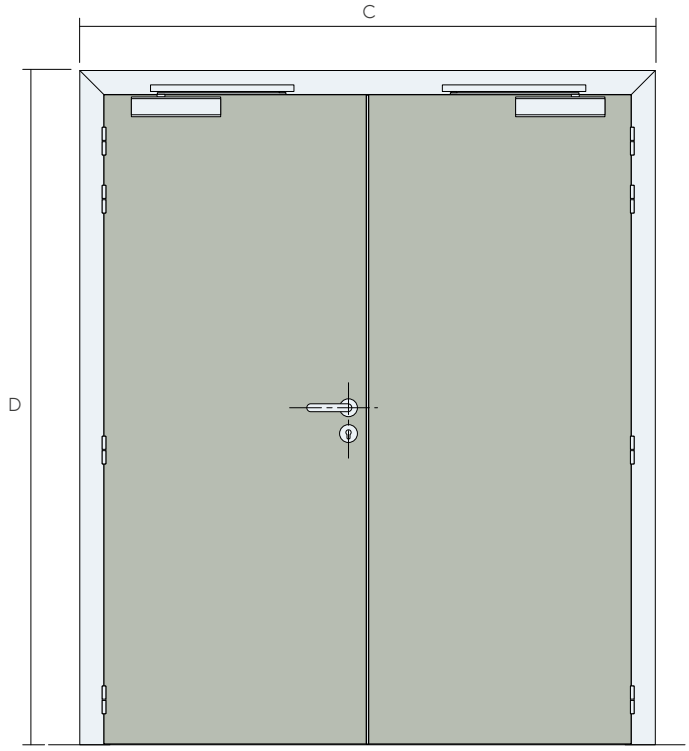

Door Head

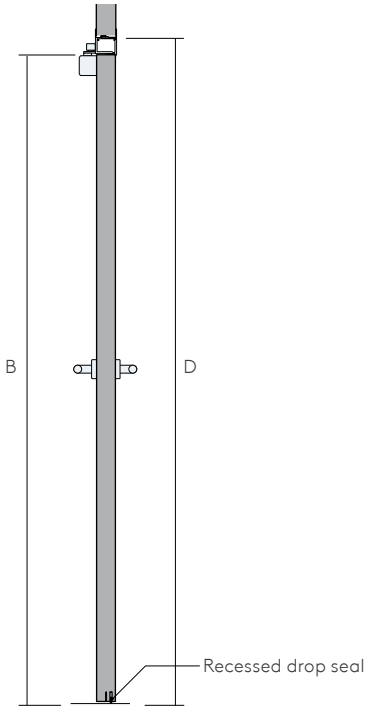

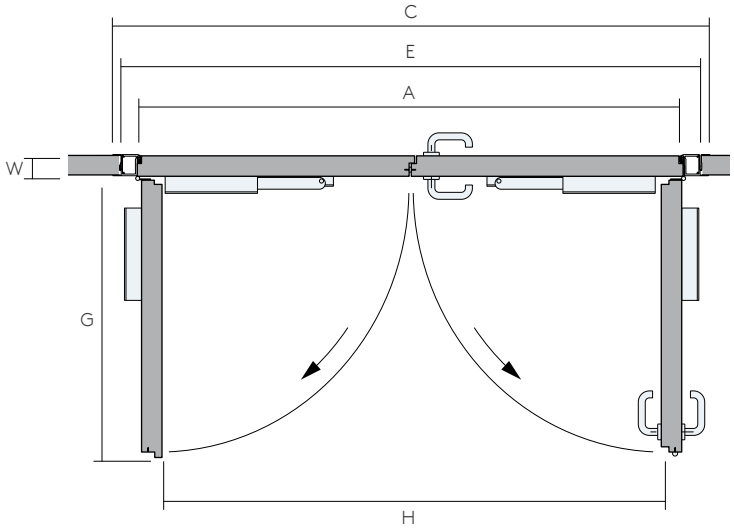

Dimensions

Clear Opening Width	A
Clear Opening Height	B
Overall Frame Width (C)	A + 180mm
Overall Frame Height (D)	B + 90mm
Structural Opening Width (E)	A + 140mm
Structural Opening Height (F)	B + 70mm
Door Clearance @ 90° (G)	A / 2 + 50mm*
Clear Opening Door @90° (H)	B – 120mm
Panel Thickness (W)	60mm

*Only on symmetrical doors. For door and half please contact technical for more information.

UltraTech Versatile Single Door
UTSF80

Technical Drawings

Nearly-flush door using clamp frame to suit 80mm walls and a 80mm flush door leaf.

Door Elevation

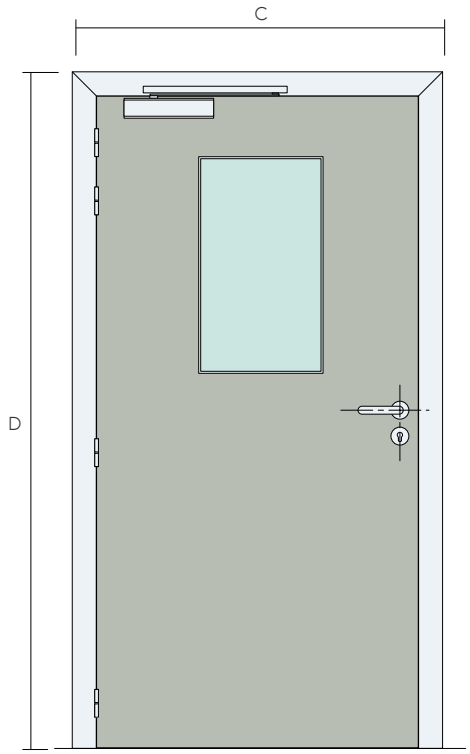

Door Head

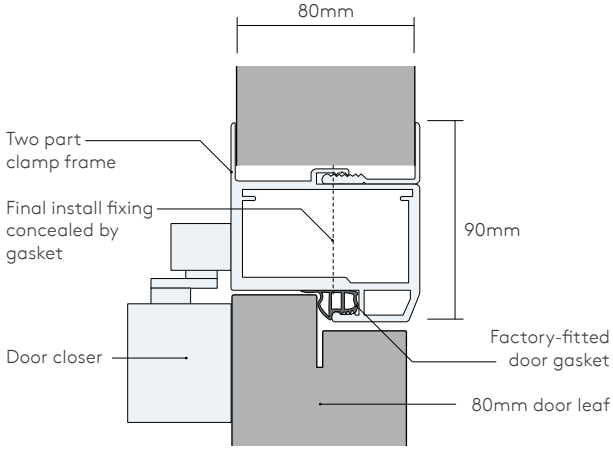

Door Jamb

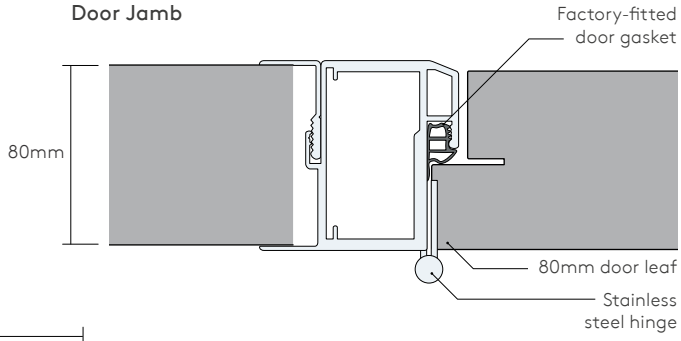

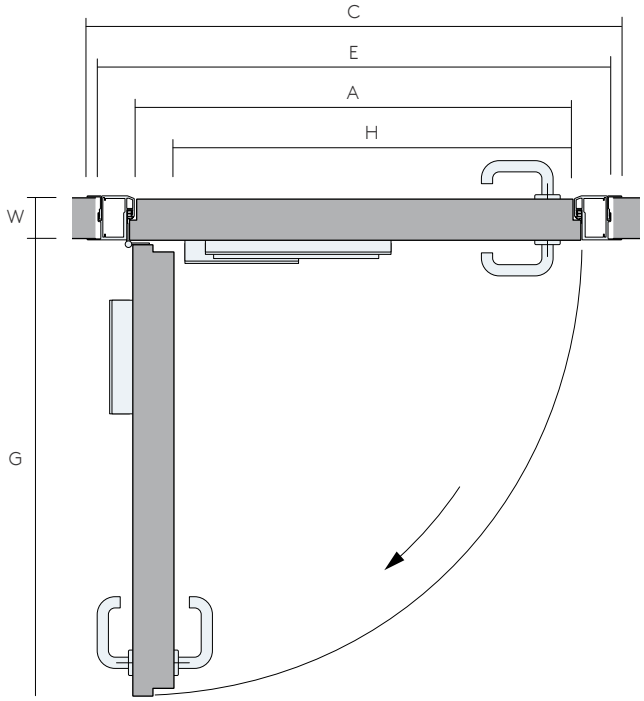

Dimensions

Clear Opening Width	A
Clear Opening Height	B
Overall Frame Width (C)	A + 180mm
Overall Frame Height (D)	B + 90mm
Structural Opening Width (E)	A + 140mm
Structural Opening Height (F)	B + 70mm
Door Clearance @ 90° (G)	A + 50mm
Clear Opening Door @90° (H)	B – 78mm
Panel Thickness (W)	80mm

UltraTech Versatile Double Door
UTSF80

Technical Drawings

Nearly-flush door using clamp frame to suit 80mm walls and a 80mm flush door leaf.

Door Elevation

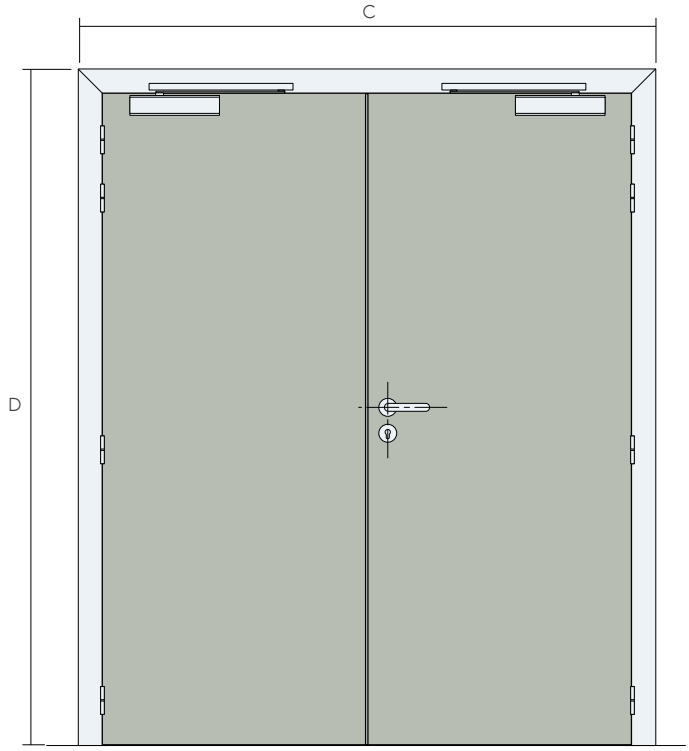

Door Head

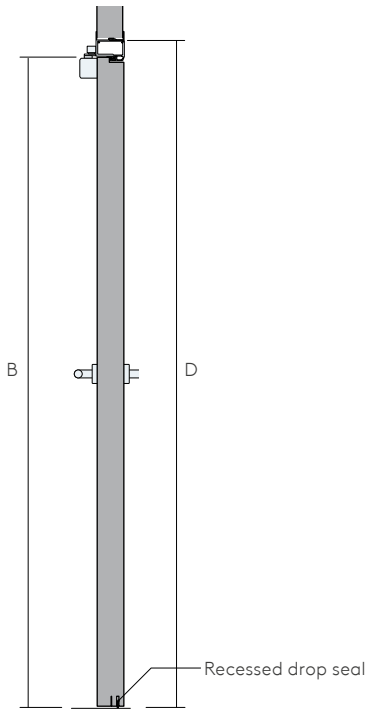

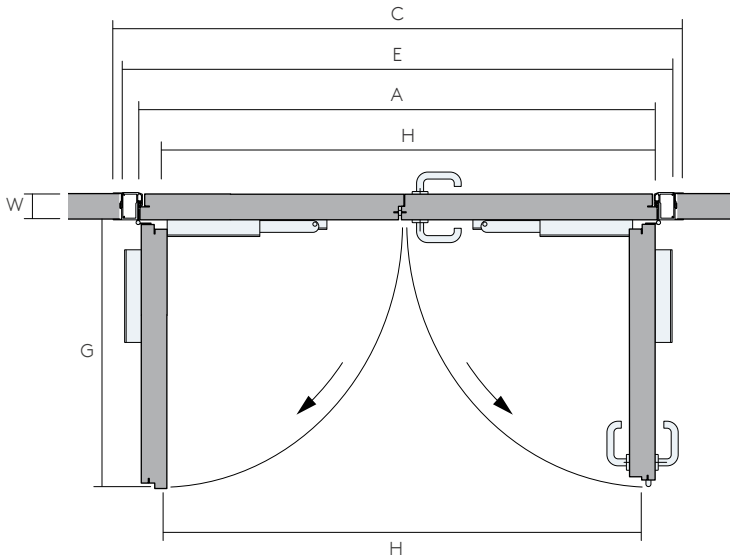

Dimensions

Clear Opening Width	A
Clear Opening Height	B
Overall Frame Width (C)	A + 180mm
Overall Frame Height (D)	B + 90mm
Structural Opening Width (E)	A + 140mm
Structural Opening Height (F)	B + 70mm
Door Clearance @ 90° (G)	A / 2 + 50mm*
Clear Opening Door @90° (H)	B – 160mm
Panel Thickness (W)	80mm

*Only on symmetrical doors. For door and half please contact technical for more information.

UltraTech Precision Single Door
UTF60

Technical Drawings

Flush 60mm door to suit 60mm Precision system.

Door Elevation

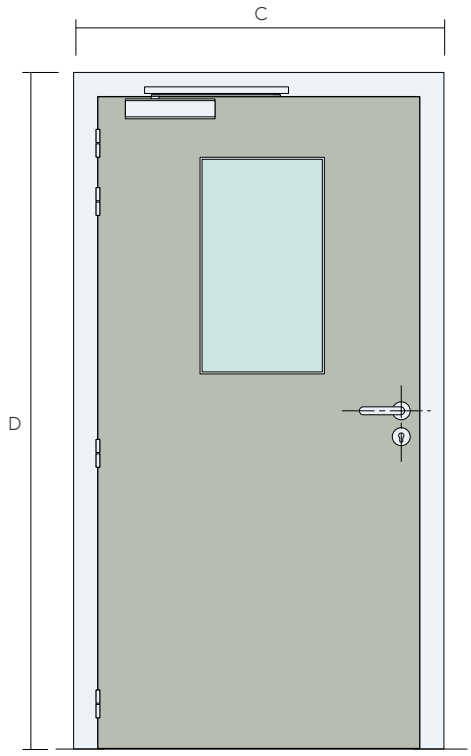

Door Head

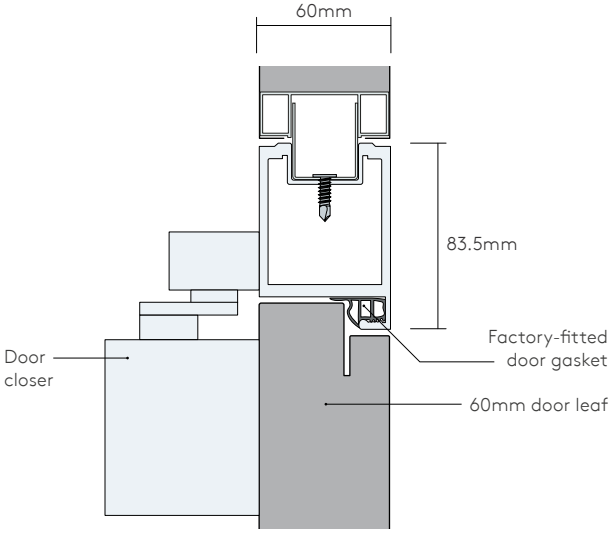

Door Jamb

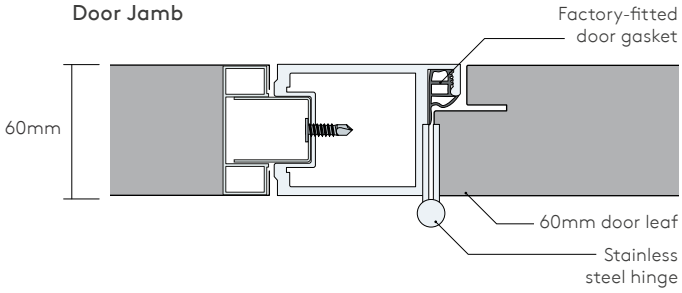

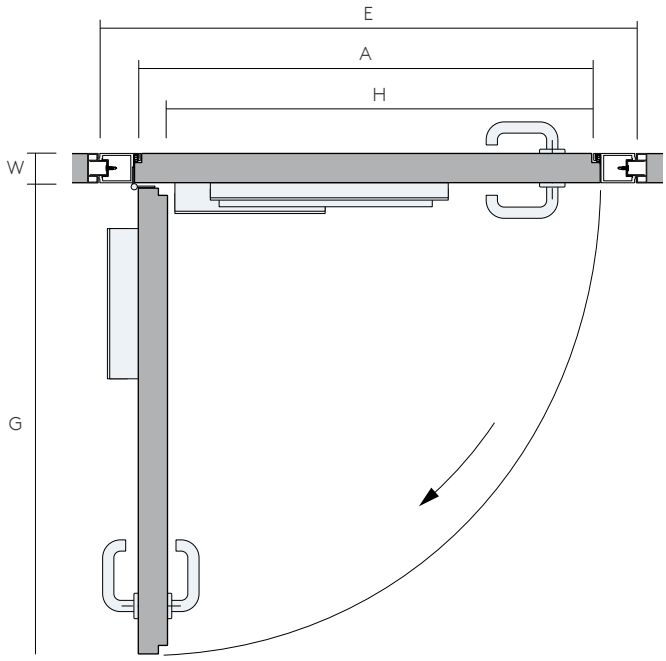

Dimensions

Clear Opening Width	A
Clear Opening Height	B
Overall Frame Width (C)	A + 170mm
Overall Frame Height (D)	B + 85mm
Structural Opening Width (E)	A + 175mm*
Structural Opening Height (F)	B + 87mm*
Door Clearance @ 90° (G)	A + 50mm
Clear Opening Door @90° (H)	B – 60mm
Panel Thickness (W)	60mm

*Including 4mm silicone gap.

UltraTech Precision Double Door
UTF60

Technical Drawings

Flush 60mm door to suit 60mm Precision system.

Door Elevation

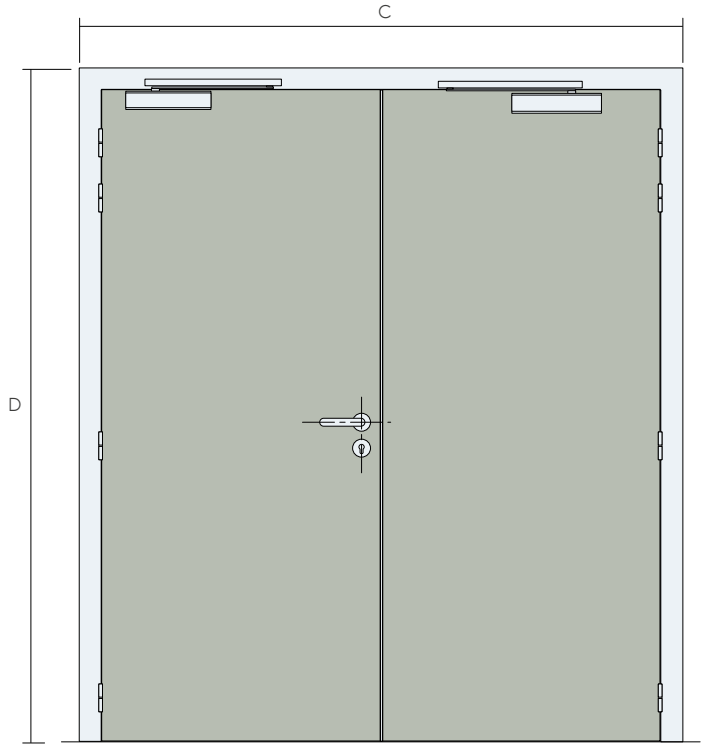

Door Head

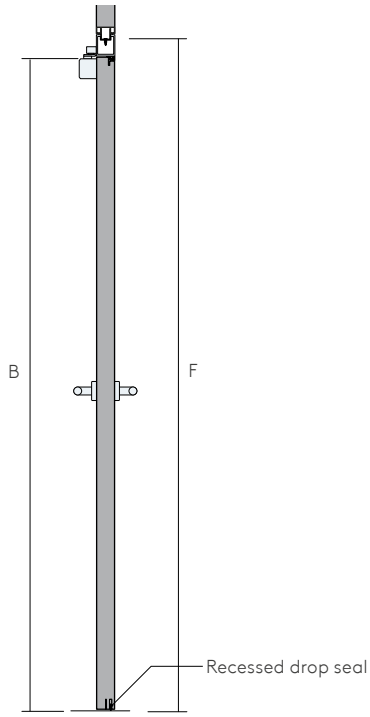

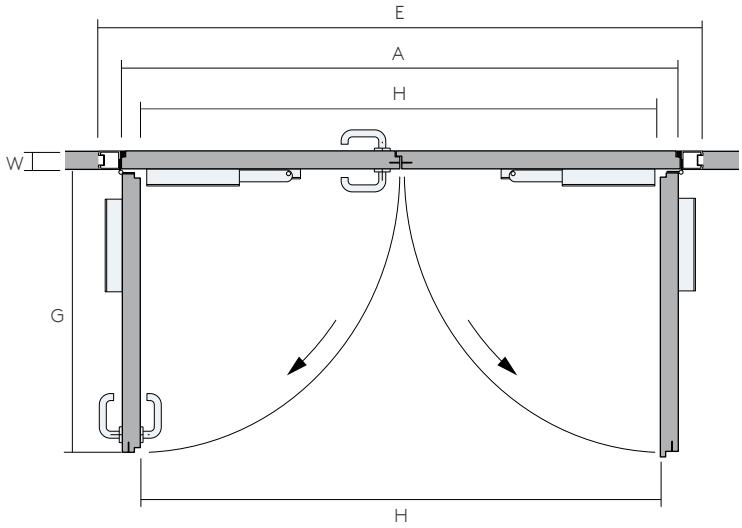

Dimensions

Clear Opening Width	A
Clear Opening Height	B
Overall Frame Width (C)	A + 170mm
Overall Frame Height (D)	B + 85mm
Structural Opening Width (E)	A + 175mm*
Structural Opening Height (F)	B + 87mm*
Door Clearance @ 90° (G)	A / 2 + 40mm**
Clear Opening Door @90° (H)	B – 120mm
Panel Thickness (W)	60mm

*Including 4mm silicone gap.

**Only on symmetrical doors. For door and half please contact technical for more information.

UltraTech Precision Single Door
UTFM60

Technical Drawings

Flush 60mm door to suit 60mm Precision system with integrated magnetic lock.

Door Elevation

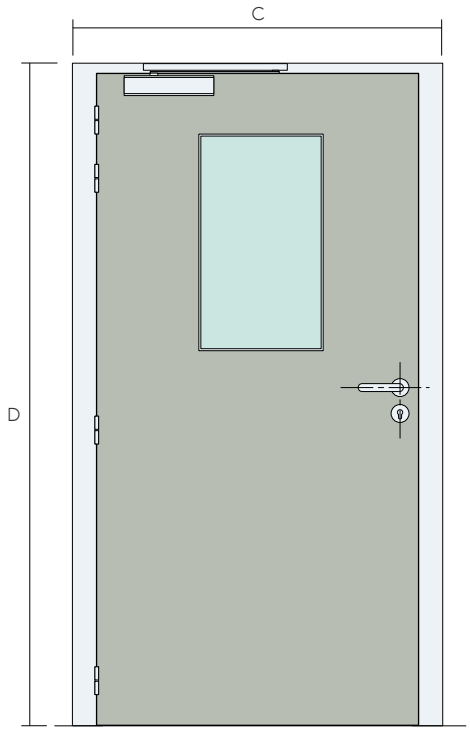

Door Head

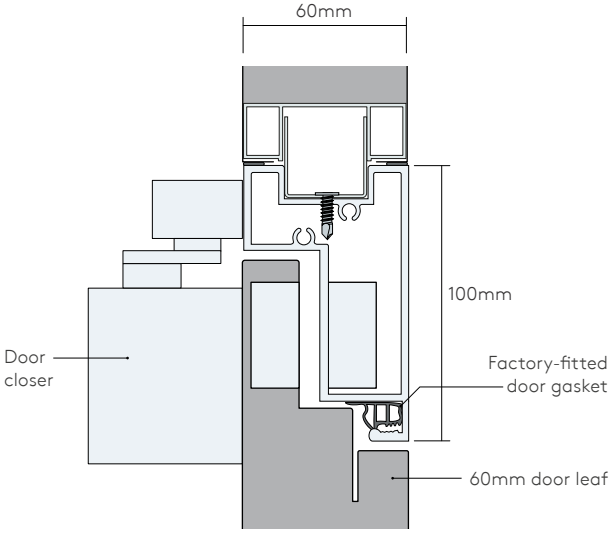

Door Jamb

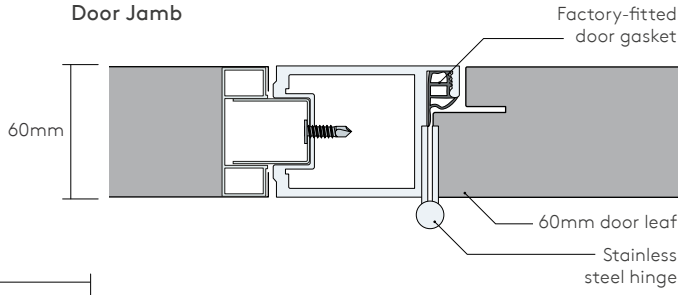

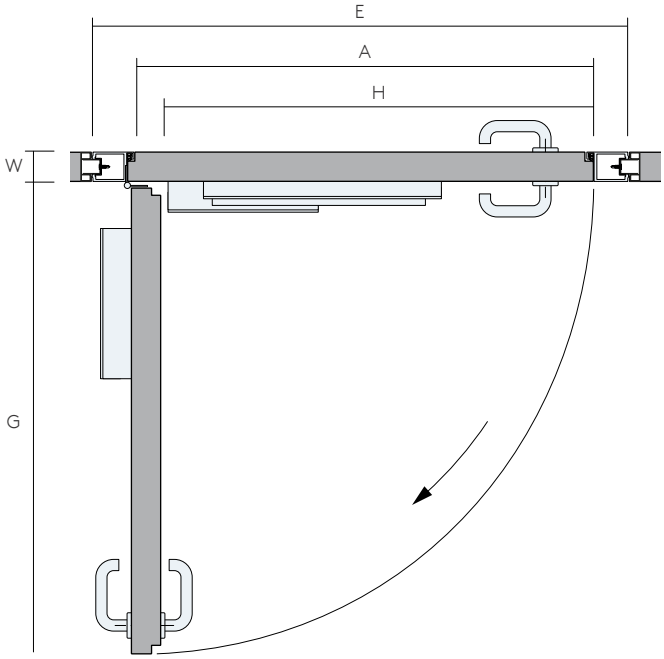

Dimensions

Clear Opening Width	A
Clear Opening Height	B
Overall Frame Width (C)	A + 170mm
Overall Frame Height (D)	B + 100mm
Structural Opening Width (E)	A + 175mm*
Structural Opening Height (F)	B + 104mm*
Door Clearance @ 90° (G)	A + 50mm
Clear Opening Door @90° (H)	B – 60mm
Panel Thickness (W)	60mm

* Including 4mm Silicone gap.

UltraTech Precision Double Door
UTFM60

Technical Drawings

Flush 60mm door to suit 60mm Precision system with integrated magnetic lock.

Door Elevation

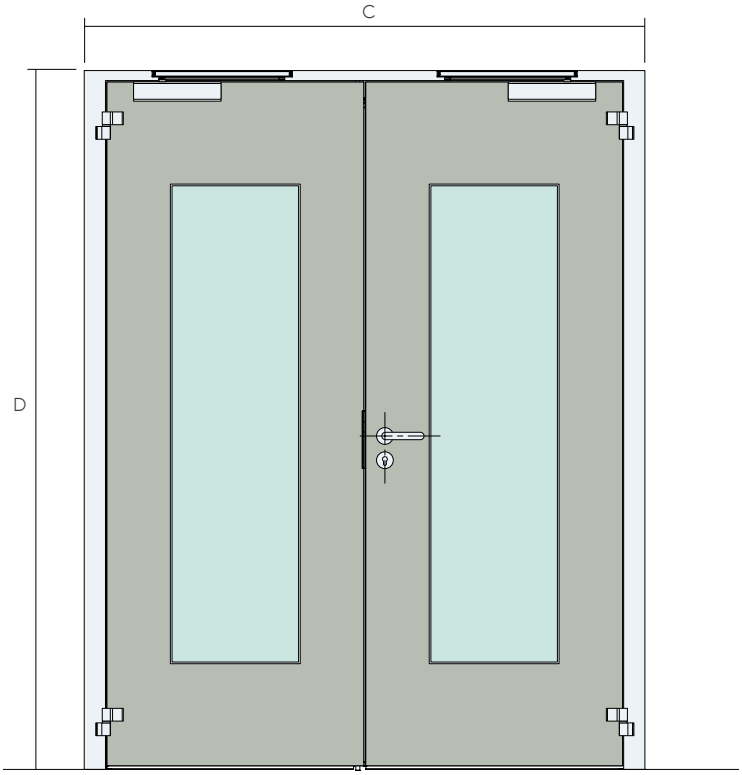

Door Head

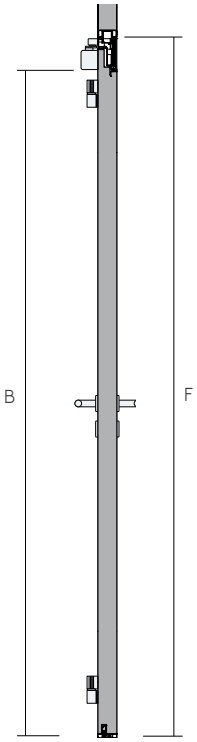

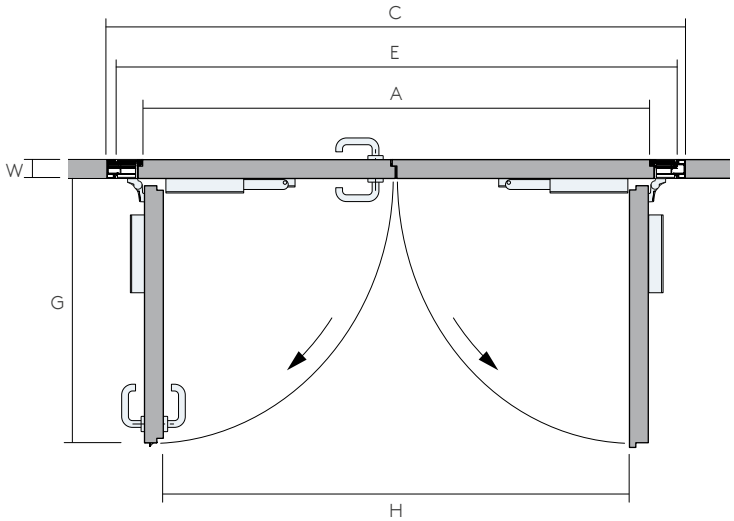

Dimensions

Clear Opening Width	A
Clear Opening Height	B
Overall Frame Width (C)	A + 170mm
Overall Frame Height (D)	B + 100mm
Structural Opening Width (E)	A + 175mm*
Structural Opening Height (F)	B + 104mm*
Door Clearance @ 90° (G)	A / 2 +50mm**
Clear Opening Door @90° (H)	B - 120mm
Panel Thickness (W)	60mm

* Including 4mm Silicone gap.

**Only on symmetrical doors. For door and half please contact technical for more information.

UltraTech Precision Single Door
UTF80

Technical Drawings

Flush 80mm door to suit 80mm Precision system.

Door Elevation

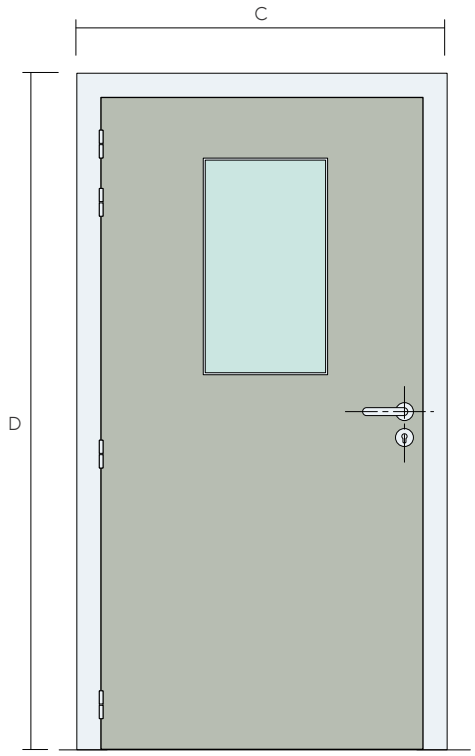

Door Head

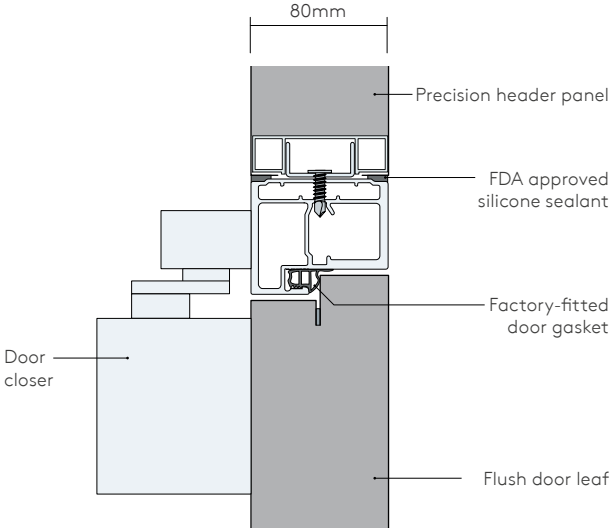

Door Jamb

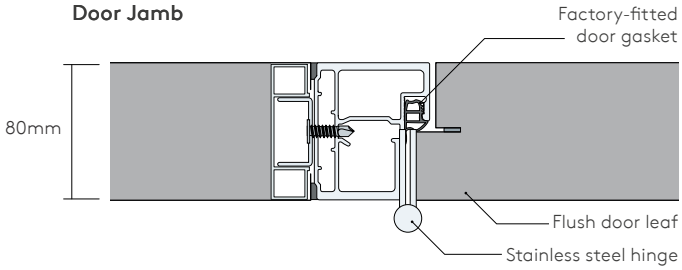

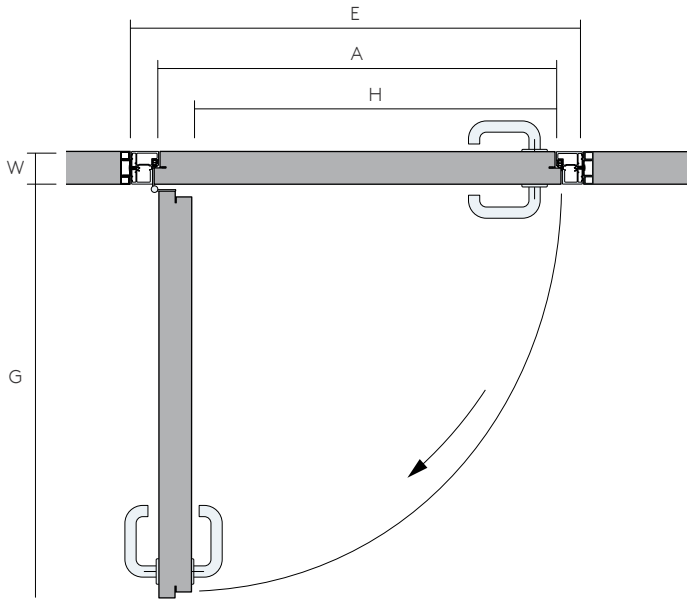

Dimensions

Clear Opening Width	A
Clear Opening Height	B
Overall Frame Width (C)	A + 133mm
Overall Frame Height (D)	B + 67mm
Structural Opening Width (E)	A + 138mm*
Structural Opening Height (F)	B + 69mm*
Door Clearance @ 90° (G)	A + 50mm
Clear Opening Door @90° (H)	B – 80mm
Panel Thickness (W)	80mm

* Including 4mm Silicone gap.

UltraTech Precision Double Door
UTF80

Technical Drawings

Flush 80mm door to suit 80mm Precision system.

Door Elevation

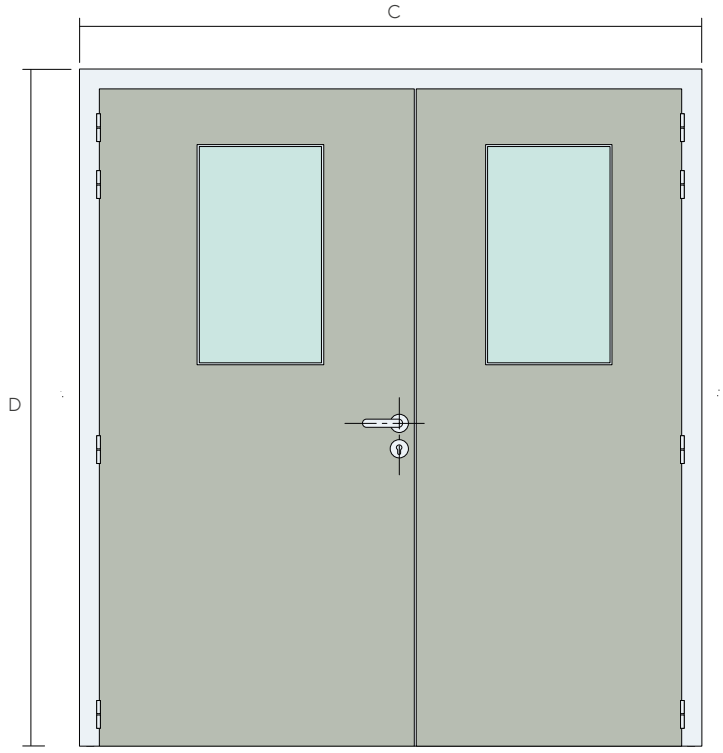

Door Head

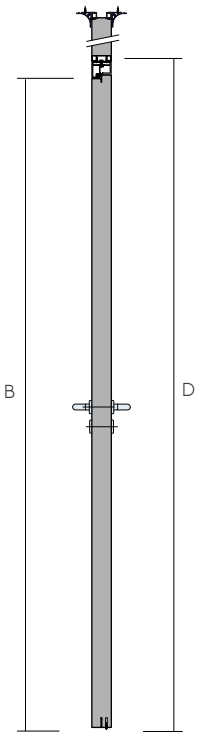

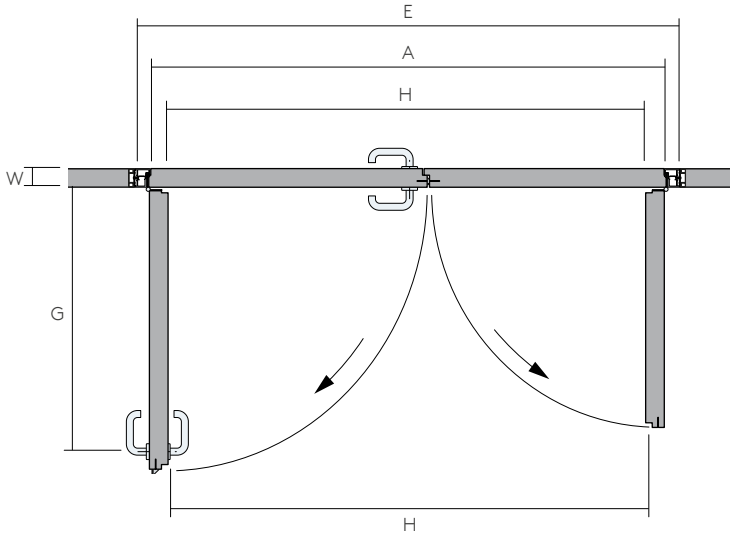

Dimensions

Clear Opening Width	A
Clear Opening Height	B
Overall Frame Width (C)	A + 133mm
Overall Frame Height (D)	B + 67mm
Structural Opening Width (E)	A + 138mm*
Structural Opening Height (F)	B + 69mm*
Door Clearance @ 90° (G)	A + 50mm**
Clear Opening Door @ 90° (H)	B – 80mm
Panel Thickness (W)	80mm

* Including 4mm Silicone gap.

**Only on symmetrical doors. For door and half please contact technical for more information.

UltraTech Sliding Door UT SL

The UltraTech Sliding door is the ideal solution for a range of clean controlled environments. Specifically designed for use in cleanroom facilities validated to ISO and Cleanroom GMP grades.

UltraTech Sliding Door delivers a high level of Air tightness and thermal performance to compliment its cleanable design.

Air Permeability Performance*

- Air permeability according to EN 12426: 2000 Class 3.
- Leakage at +50Pa positive pressure 5.2m³/h.m².
- Leakage at -50Pa positive pressure 5.3m³/h.m².
- Resistance to water penetration according to EN 12425: 2000 Class 2.
- Resistance to windload according to EN 12424: 2000 Class 3.

Technical Details

Door drawings and models are available in Revit format. Please scan the QR Code to gain access to our Revit families through BIM360.

For 2D CAD files and design requests, please contact Kingspan Tech-eXchange.

Technical Specification

Door Leaf	QuadCore® insulation and mineral fibre door
	60mm thick door leaf
Door Coatings	Kingspan CLEAN*safe* coating range
	Powder coated galv
Door Frame	Aluminium 6063 alloy – polyester powder coated (depending on wall thickness)
	Frame suitable for 50mm – 150mm wall thickness
Clear Opening Width	900mm – 2000mm TBC**
Clear Opening Height	2,400mm (max.)**
Standard Fitting Options	Fermod Rail System – Fermoclean 2920
	Fermod 2320 internal and external handles
	Vision panels – with flush integration to door leaf
	Stainless steel kickplates
Additional Fittings Available	Interlocking system
	Automated motor rail system Fermoclean 2990

*Values stated are for standard single door with drop seal. For other information please contact the Tech-eXchange team.
**For larger sizes please contact Tech-eXchange team for information.

Door Elevation

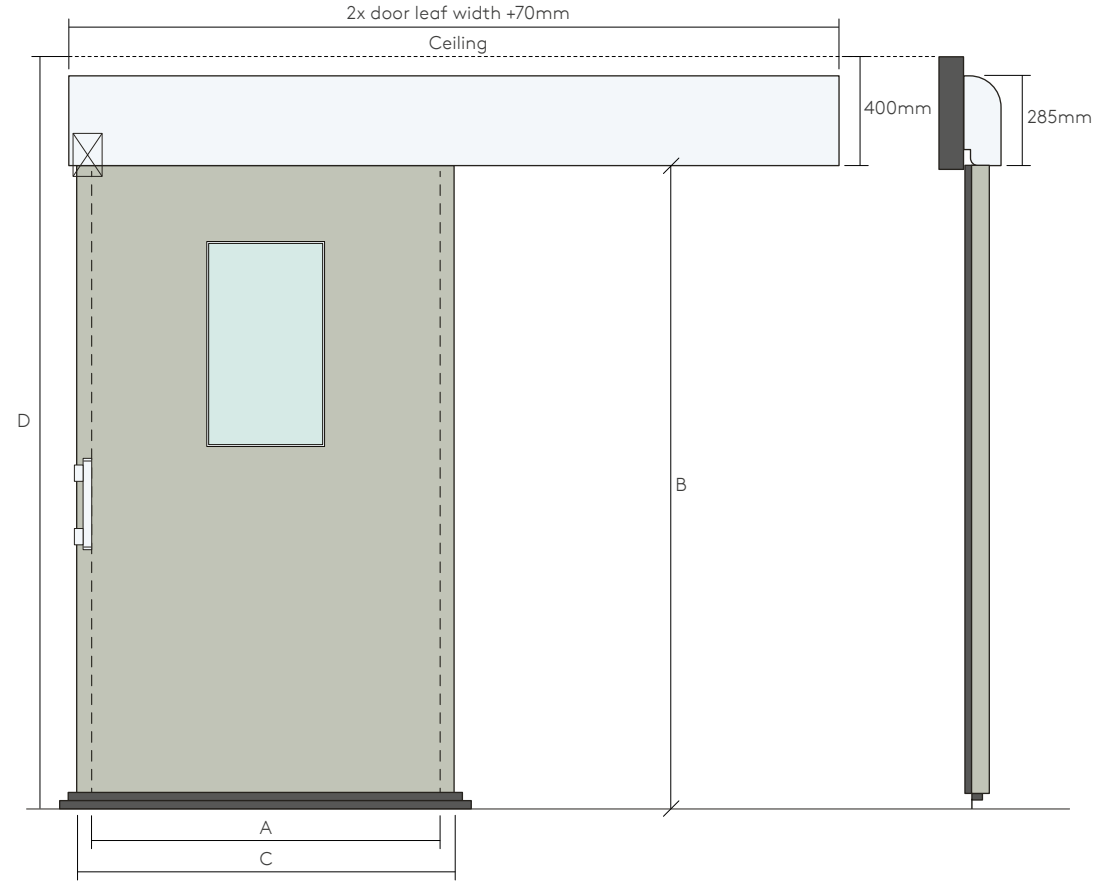

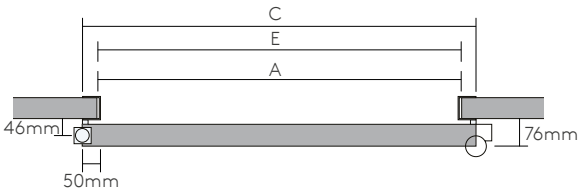

Plan Detail

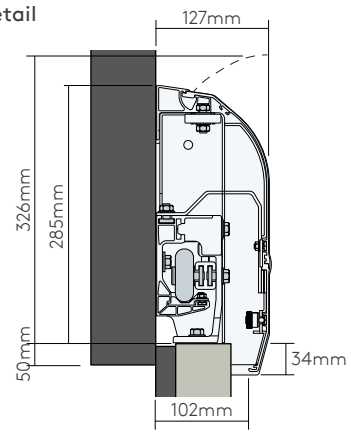

Dimensions

Clear Opening Width	A
Clear Opening Height	B
Overall Frame Width (C)	A + 100mm
Overall Frame Height (D)	B + 50mm
Structural Opening Width (E)	A + 20mm
Structural Opening Height (F)	B + 10mm
Panel Thickness (W)	50-150mm

Case Studies
Convatec

Convatec, a global medical products and technologies company, with leading market positions in ostomy care, wound therapeutics, critical care and infusion devices had requirement for a cleanroom to house multiple bonding machines and to assist with the manufacture of wound dressings.

High-performance panels, doors and windows featuring the UltraTech Precision modular system by Kingspan were used internally. The system uses the CLEAN*safe* 55 coating, which boasts superior durability and chemical resistance. The UltraTech system allows for fully flush details, integrated cleanroom doors, glazed flush units and air return panels. This was used in conjunction with a Kingspan UltraTech Versatile fully walk on ceiling with factory cut openings for lights and HVAC system to speed up installation on site.

for Wound Care

Case Studies
St. Vincent´s University Hospital

St. Vincent's University Hospital, one of the world's leading academic teaching hospitals, through an expansion of services, established the need for a state of the art aseptic compounding unit (ACU).

Kingspan's UltraTech Precision system was selected as the cleanroom fabric owing to its fully flush details, ensuring ease of maintaining a sterile environment, along with the many flexible options including a horizontal service raceway providing flush power sockets and data points. UltraTech flush doors installed as part of the design strategy are colour-coded to differentiate the internal room areas within the compounding suite.

Kingspan's CLEAN*safe* 55 coating, already pre-approved for use with many Biocidal and Virucidal agents, gave the hospital the confidence of a long lifespan for the cleanroom fabric.

Notes

Contact Details

UK

Kingspan Limited
Greenfield Business Park No. 2
Greenfield | Holywell | Flintshire
North Wales | CH8 7GJ

T: +44 (0) 1352 716100
F: +44 (0) 1352 710161
E: info@kingspanpanels.com

Your Local Contacts

Find your local contact to the cleanroom systems team on our website: **www.kingspan.com**

For the most up-to-date version of this document please scan or click here.

For the product offering in other markets please contact your local sales representative or visit www.kingspanpanels.com

Care has been taken to ensure that the contents of this publication are accurate, but Kingspan Limited and its subsidiary companies do not accept responsibility for errors or for information that is found to be misleading. Suggestions for, or description of, the end use or application of products or methods of working are for information only and Kingspan Limited and its subsidiaries accept no liability in respect thereof.

Third Issue | 02/04/2026